ADTECH
95 Mt. Read Blvd # 149
Rochester, New York 14611 USA
Phone: 1.585.698.1845
Fax: 1.585.697.0445

www.adtech-inst.com

Pulse Summing Module Model No. PSM 57

The Adtech PSM 57 Pulse Rate Summing Module provides an accurate and economical means of adding (summing or counting up) multiple contact closure or pulse rate inputs to a single output pulse rate representing the sum of the inputs. The PSM 57 may also be configured to subtract multiple inputs. Optionally, it can be configured as a mixed-channel module with 1, 2, or 3 count-up sensors and 1 count-down sensor as inputs with the output proportional to the scaled algebraic sum; specify. The subtract rate must be lower than the add rate.

The PSM 57 is supplied with three of the four inputs "A, B, and C," each set up for two decades of scaling per input as standard with no scaling for input "D". The unit may alternately be specified with input "A" having four decades of scaling and input "B" having two decades of scaling. This standard flexibility provides optimum performance for two, three, or four inputs.

Contact anti-bounce circuitry protection prevents false information and a loss of pulses during normal operation.

Minimum "discrimination time" between input pulses is 0.01 milliseconds.

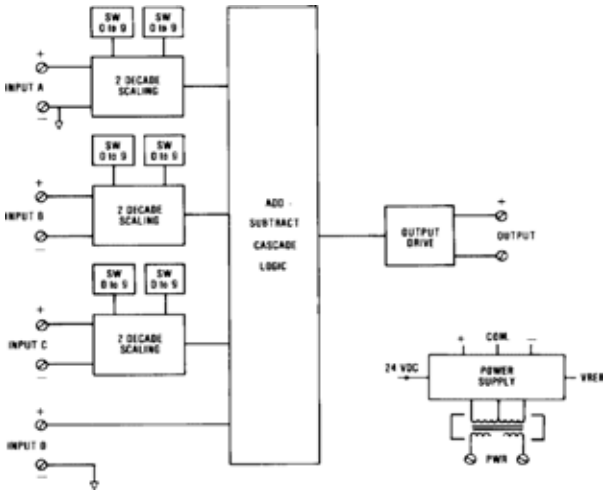

FEATURES

- Adds or Subtracts Inputs: Two, three, or four inputs
- Types of Inputs: Sine, square wave, or contact closure
- Inputs, Voltage, or Contact: Turbine/flowmeter, tachometer/speed
- Input Frequency Range: DC to 20 kHz
- High Input Impedance: 100K ohms
- Output = F1/N1 ± F2/N2 ± F3/N3 ± F4
- Anti-Coincidence Protection: Eliminates count errors due to arrival of simultaneous input pulses
- Discrimination Time: 0.01 milliseconds
- Output pulses: 24 VDC, 50 milliseconds- standard; other voltages and pulse widths-optional

Typical Applications

- Total flow computation
- Total electric power summation
- Total heat load BTU's
- Multiple turbine meter flow scaling and totalization
- Multiple positive displacement meter scaling and totalization
- Multiple positive watt-hour meter scaling and totalization

Connections / Dimensions

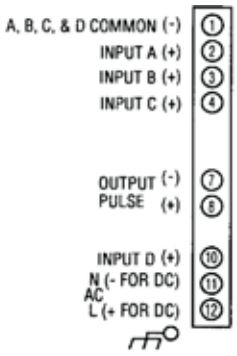

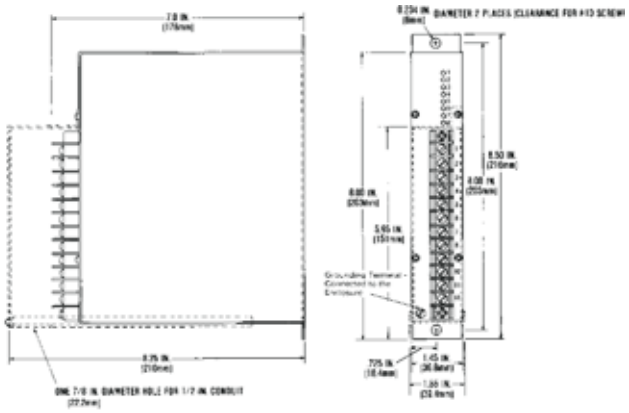

INPUT/OUTPUT

Input Signals (2,3, or 4 inputs)
Voltage: Sine or square wave: 9-volt to 24-volt pulse; other ranges- consult Adtech
Frequency Range: DC to 20K Hz
Contact: Dry, 2 MA @ 24 VDC rating: specify

Output Signals
24 VDC nominal pulses into 100 ohms minimum, 50 milliseconds pulse width nominal.
Other voltages and pulse widths-optional.
Scaling Range: Two decades for up to three inputs. Adjustable divider factor of 1 thru 99. The unit may be configured as required (two decades for each of three inputs; or four decades on one input, and two decades on the second input).

PERFORMANCE

Calibrated Accuracy: Exact all-digital counting
Repeatability / Resolution: Exact all-digital counting
Temperature Stability: No effect over temperature range
Response Time: Instantaneous
Temperature Range: 0º to 140 ºF (-18º to 60 ºC) operating; -40 to 185 ºF(-40º to 85 ºC) storage
Power Supply Effect: None over rated range
Note: All accuracies are given as a percentage of span.

POWER

115 VAC: 50/60 Hz, 0.7 PF	(Standard)	48 VDC: Isolated	(Option P3)
12 VDC: Isolated	(Option P8)	125 VDC: Isolated	(105-140 VDC)
24 VDC: Non-isolated	(Option P1)	230 VAC: 50/60 Hz, 0.7 PF	(Option P5)
24 VDC: Isolated	(Option P2)		

Note: All units 3 watts maximum, and a ±10% power variation unless noted.

MECHANICAL

Electrical Classification: General Purpose
Connection: Barrier terminal strip (3/8 " spacing, No.6 screws)
Controls: None
Internal: 10-position decade switches
Mounting: Surface mounting standard. See Housings Section for options.
Weight: Net Unit: 2.6 pounds (1.18 kilograms); Shipping: 3.0 pounds (1.36 kilograms)

Options

Option Number	Description
H 10	Thin-line conduit mounting plate and terminal cover
H 13B, H 14B, H 15B	NEMA 4, 7, and 12 enclosures
H 16	PFA high-density plug-in enclosure

Ordering Information

- Model number
- Input pulse rate and voltage for each input
- Scaling for each input
- Equation (ie: add or subtract)
- Prime power with option no.
- Input/output options
- Housing and miscellaneous options

Please refer to the Housing and/or Option Section for more specific and detailed information.